Ignition Switch Circuit

DESCRIPTION

If the ignition switch is turned ON, battery positive voltage is applied to the switches, such as terminal IG of the ECU.

WIRING DIAGRAM

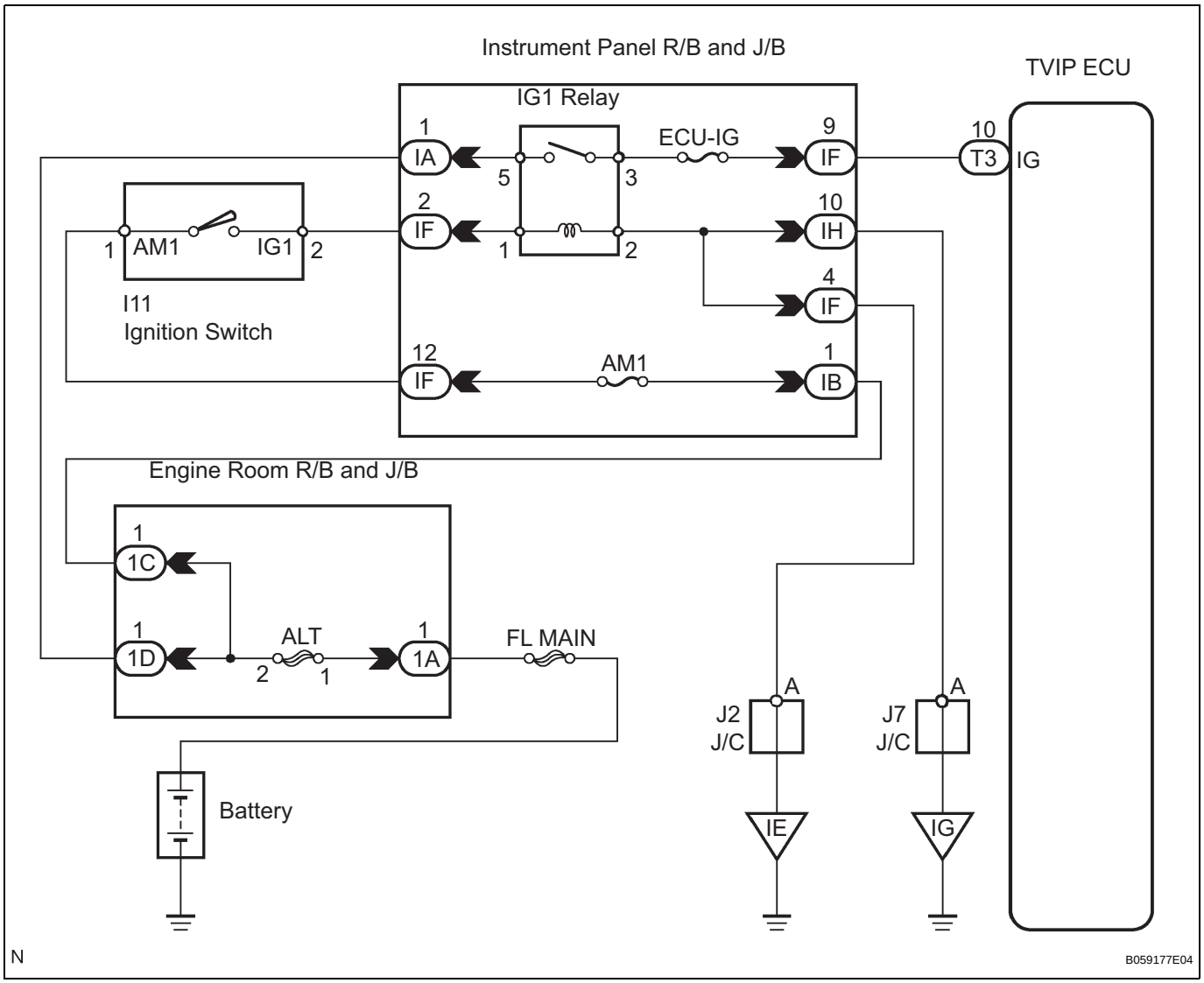

TD

INSPECTION PROCEDURE

1	CHECK IGNITION OR STARTER SWITCH ASSEMBLY

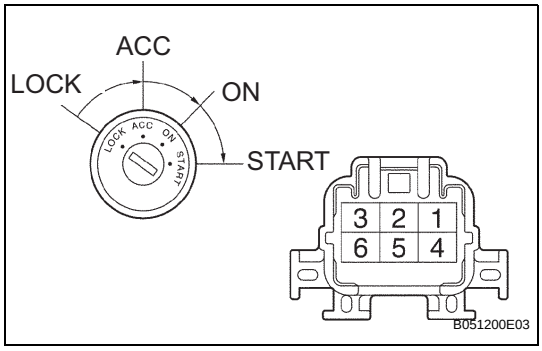

(a) Measure the resistance according to the value(s) in the table below.
Standard resistance

Tester Connection	Switch Condition	Specified Condition
-	LOCK	-
1 - 3	ACC	Below 1 Ω
1 - 2 - 3	ON	Below 1 Ω
5 - 6	ON	Below 1 Ω
1 - 2	START	Below 1 Ω
4 - 5 - 6	START	Below 1 Ω

NG → **REPLACE IGNITION OR STARTER SWITCH ASSEMBLY**

OK

2	INSPECT FUSE (ECU-IG)

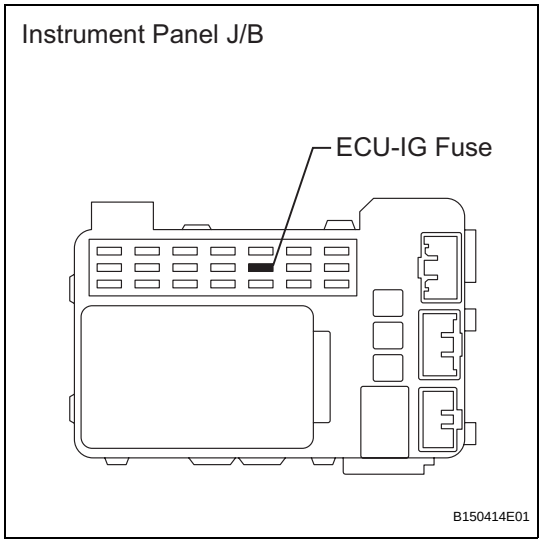

(a) Remove the fuse from the instrument panel J/B.
(b) Measure the resistance of the fuse.
Standard resistance:
Below 1 Ω

NG → **REPLACE FUSE**

OK

3 INSPECT RELAY (IG1)

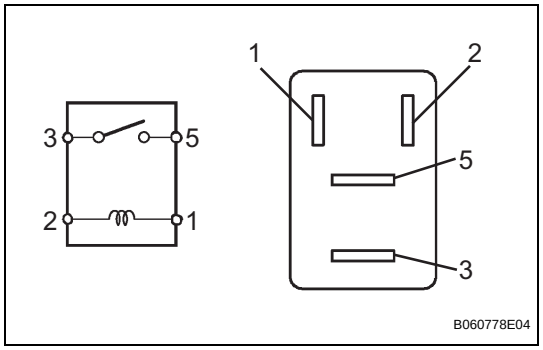

(a) Remove the IG relay from the instrument J/B.
(b) Measure the resistance according to the value(s) in the table below.

Standard resistance

Tester Connection	Specified Condition
3 - 5	10 kΩ or higher
3 - 5	Below 1 Ω (when battery voltage is applied to terminals 1 and 2)

NG → **REPLACE RELAY**

OK

4 CHECK HARNESS AND CONNECTOR (TVIP ECU - BODY GROUND)

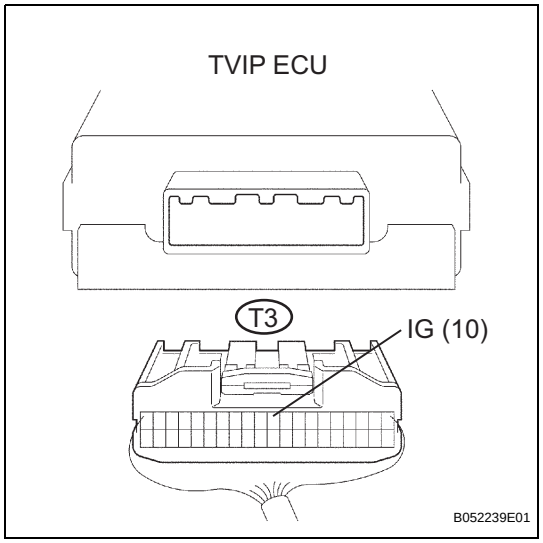

(a) Disconnect the T3 TVIP ECU connector.
(b) Turn the ignition switch ON.
(c) Measure the voltage according to the value(s) in the table below.

Standard voltage

Tester Connection	Specified Condition
IG (T3-10) - Body ground	10 to 14 V

NG → **REPAIR OR REPLACE HARNESS OR CONNECTOR**

OK

REPLACE TVIP ECU

TD